Induspec
engineering profitability

Autoclave

Background

Induspec was selected as the general contractor to provide turn-key design and construction services for a new pressure vessel installation for an industrial customer in the North Bay Region.

Initial Condition

Induspec worked with the client to determine the exact location of where the vessel was to be located and then worked with the client and other service providers to deal with a number of sub-surface utilities and structural constraints.

General Scope

Induspec developed a foundation design which overcame the inherent constraints of the site, brought in a sub-contractor to perform the excavation, forming, pouring and finishing of concrete so that the entire foundation was safely built in accordance with specifications.

Work Performed

Induspec prepared detailed drawings of the foundation system, steam, condensate and compressed air piping designs, a new loading cart for the vessel, as well as a bridge and enclosure. Induspec oversaw all work including leading a PSSR process to ensure that no safety issues were overlooked

Recommendations

As is typical with large complex projects, there were certain problems. Weather, contractor timing and cost were all challenges which affected this project, but Induspec worked with the client to see the vessel in safe and successful operation.
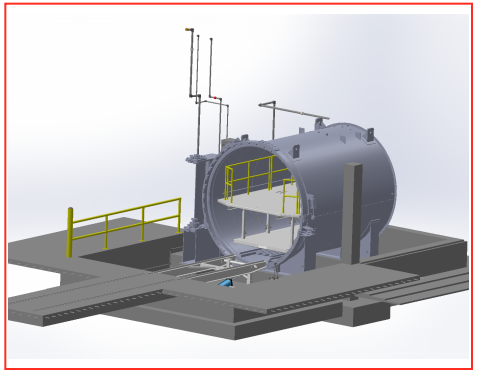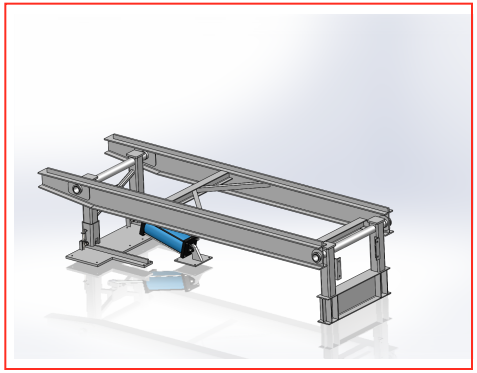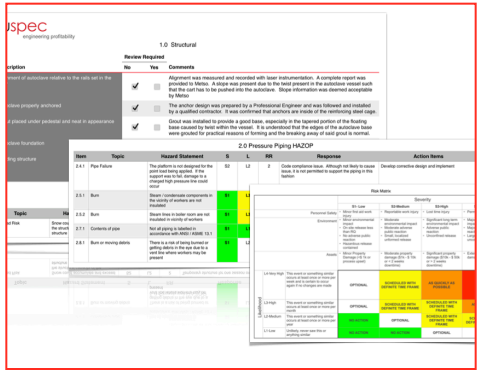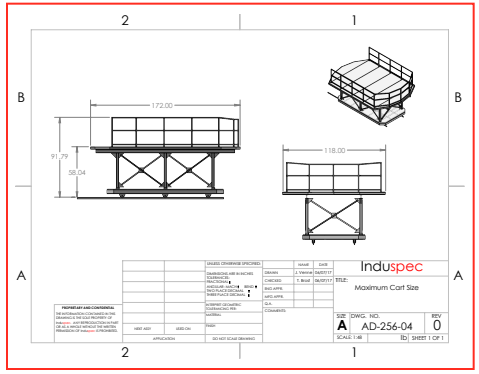
Gallery