Induspec
engineering profitability

# Multi-Level Platform Retrofit

J000493

## Background

New manufacturing equipment was to be installed as part of a pilot project to reduce down-time due to frequent failures of the existing equipment.

## Initial Condition

The existing multi-level support platforms used for the manufacturing equipment was thought to be of insufficient size to accommodate new equipment which had been selected as a replacement. It was suspected that the existing platform was both, too short and too narrow for the size of the new equipment.

## Analysis

The relevant dimensions of the new manufacturing equipment were obtained from on-site measurements, as well as from the manufacturer's specifications. The relevant dimensions of the existing multi-level platform were also obtained on-site.

## Outcome

Based on the layout of the new equipment and the existing multi-level platform, it was determined that vertical and horizontal extension was required.

## Recommendations

Induspec collaborated with the client, as well as the fabricator/installer, to determine a cost-effective solution to retrofit the existing platform to accommodate the new equipment. Instead of cutting down and rebuilding the existing platform, Induspec developed a safe and innovative approach to modify, cut and lift the existing platform to the desired height.The retrofit involved the use of hydraulic jacks and temporary bracing to elevate the upper-level platform to the desired height in order to minimize downtime and facilitate the reuse of existing materials. Other minor required modifications were also considered and taken into account, such as railing obstructions and the positioning of the ladder.

## Implementation

Sealed fabrication design drawings, as well as a comprehensive jacking procedure, were provided to the client within two weeks of the initiation of the project. Within three weeks, the multi-level platform retrofit was complete. Induspec performed a final site visit to confirm the compliance of the work with the specifications provided. The new equipment was promptly installed and production moved forward without any further delays.
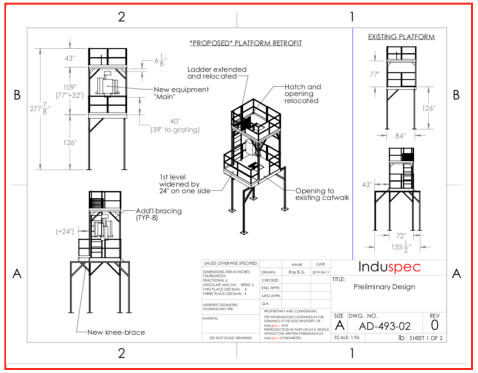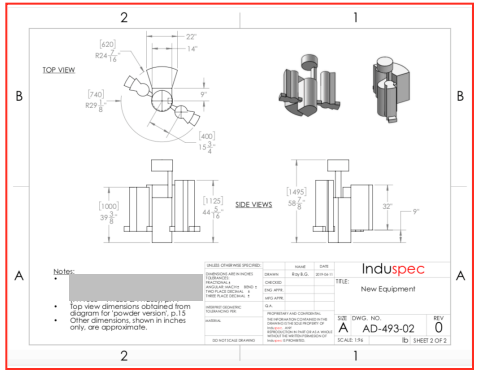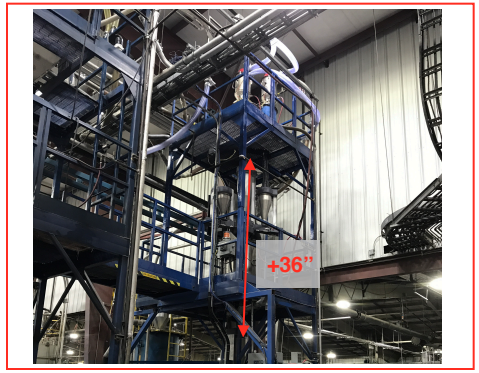
# Gallery