Induspec
engineering profitability

Airborne Isolation Room

Background

A regional hospital has two Airborne Isolation Rooms (AIR). As a normal course of business, they requested that Induspec verify air flows and differential pressure gradients in these rooms as part of an air survey.

Initial Condition

Upon arrival everything appeared fine. The rooms had been recently (within the last 5 years) constructed and appropriate diffusers and exhaust grates were evident. The control system showed “green” indicating all was fine and the pressure differential indicated met CAN/CSA Z317-15 requirements.

Analysis

Taking nothing for granted, we used a laser to measure the room volume, used a calibrated bolometer to measure supply and exhaust flow and used a high resolution differential pressure meter to verify the pressure gradient between the corridor, anteroom and AIR

Identified Cause

We noticed a problem when the supply air into the AIR was considerably higher in volume than the exhaust air, making it impossible for the AIR to be under negative pressure. We saw that the supply air was also well short of the hourly air exchanges required by the Standard and that the anteroom had only a supply diffuser and no exhaust installed at all. Taking differential pressure readings showed that the differential between the AIR and anteroom only existed because the sealed anteroom was highly pressurized. In fact, as smoke testing showed, the anteroom was constantly leaking significant air into the corridor.

Recommendations

The immediate priority was to correct the pressure gradient. The hospital staff and Induspec worked together and sealed off the supply air to the anteroom. Next, the team sourced a suitable exhaust fan and installed significant additional exhaust into the two AIR’s. Induspec verified that, although still less than required by the standard, the pressure gradient is now in the correct direction.

Implementation

Induspec verified the temporary system and ultimately designed and supplied a custom HEPA exhaust system so that AIR exhaust could be safely dealt with. All of this work was performed in a matter of days, in cooperation with custom manufacturers and hospital staff. Outstanding results with a team effort!

Gallery

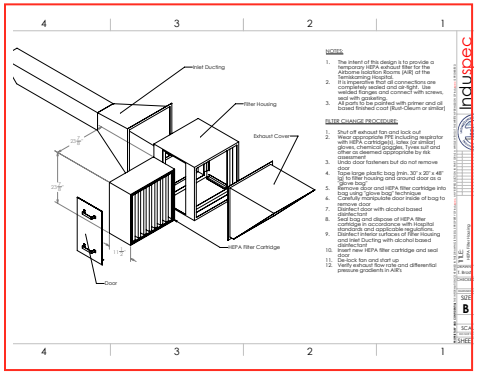

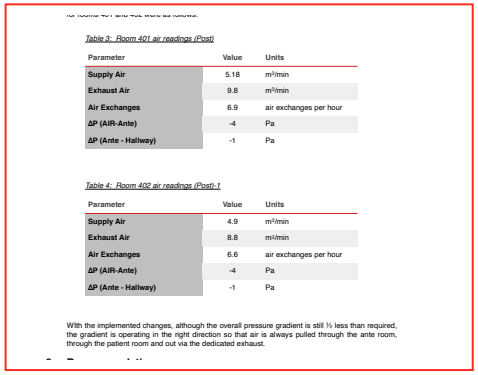

Table 3: Room 401 air readings (Post)

Parameter	Value	Units
Supply Air	5.18	m³/min
Exhaust Air	9.8	m³/min
Air Exchanges	6.9	air exchanges per hour
ΔP (AIR-Ante)	-4	Pa
ΔP (Ante - Hallway)	-1	Pa

Table 4: Room 402 air readings (Post)-1

Parameter	Value	Units
Supply Air	4.9	m³/min
Exhaust Air	8.8	m³/min
Air Exchanges	6.6	air exchanges per hour
ΔP (AIR-Ante)	-4	Pa
ΔP (Ante - Hallway)	-1	Pa
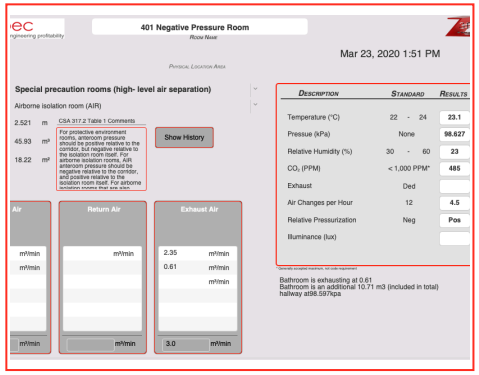
With the implemented changes, although the overall pressure gradient is still ½ less than required, the gradient is operating in the right direction so that air is always pulled through the ante room, through the patient room and out via the dedicated exhaust.